NATE

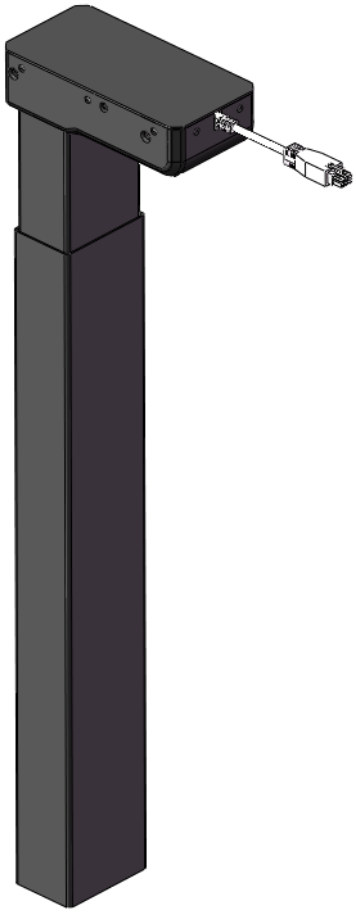

LIFTING COLUMN

HF2A

Product Data Sheet

www.natekj.com

NATE DRIVE

NT33- HF2A

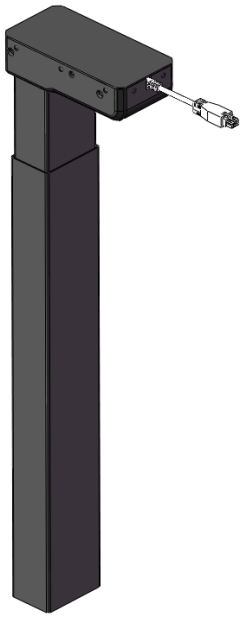

The HF2A is a two-section , non-perforated lifting device with a rectangular outer tube measuring 90 x 60 mm.
This upright column is suitable for various desktop application needs and is in a formal configuration.
The mounting holes for the HF2A are interchangeable with those for other square tube lifting columns such as the HF3A .
Given the same desktop and feet, choose the appropriate option based on your actual needs.
The lift column. For solutions involving opposite tables, the lift column can be equipped with pads and connecting links.
Used in conjunction with the connecting rod.

The HF2A rising bollard is available in three standard color schemes (black, gray, and white), but is also available in other colors.
Other colors can be selected as needed. The column has an obstacle detection and reversal function, maximizing its stability.
This significantly reduces the risk of the standing table encountering obstacles.

The HF2A can be paired with a variety of NATE custom hand controllers, allowing customers to choose the one that best suits their needs.
Choose one with features such as USB charging, location memory, and child lock.

characteristic :

- Enhanced lifting column with optimized motor housing design, offering higher strength and stability.
- Maximum load : 800 N per lifting column
- Maximum speed: 30 mm /s (unloaded)
- Installation dimensions : 66.5 mm
- Travel: 500 mm
- Weight : Approximately per bollard kg
- Operating sound : < 50 dB
- Dimensions of the lifting bollard : 90 x 60 mm (Exterior) 85 x 55 mm (Interior)
- Motor housing dimensions: 1 95 x 9 6 x 50 mm
- Colors: Available colors: Black (RAL Eggshell Gloss 9005) , Silver Gray (Silver Gray EM Semi-gloss 2921), White (RAL Semi-gloss 9016)
- Quiet, calm

Options :

- Optional matching placemats

use:

- Two lifting columns driven synchronously ; one controller, one manual controller.
- Duty cycle: 10% ≈ 2 minutes of continuous full-load use , then pause.
  18 minutes
- Ambient temperature: 10 to 40 ° C
- Storage and transport temperature: -10 to +70 ° C
- For system compliance information, please refer to the "Conformity Declaration " in the User Manual.

With a fully retracted length of 665 mm and a travel length of 500 mm , the standard system offers a desktop height adjustment interval of 700 mm to 1200 mm , allowing the desk to be used for both seated and standing work.

www.natekj.com

HF2A

Ordering example:

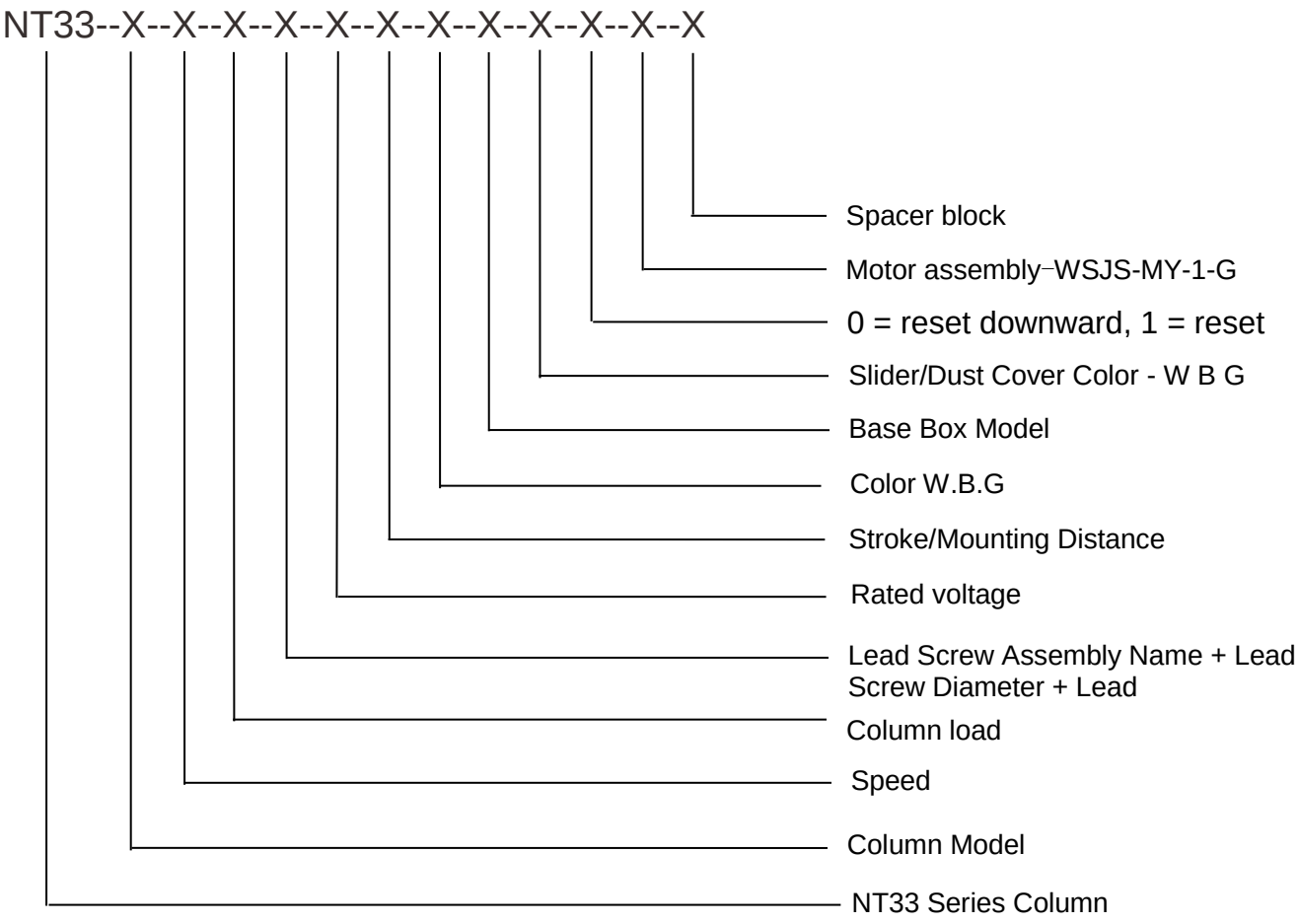

F indicates no hole, A indicates upright, and R indicates inverted.

Note that for a table, the padding blocks are used to connect the two uprights at positions A1 and A2. For a single table with added cross bracing, the padding blocks are used to connect the two uprights at position A3.

Dimensions

All measurements do not include the thickness of the powder coating.

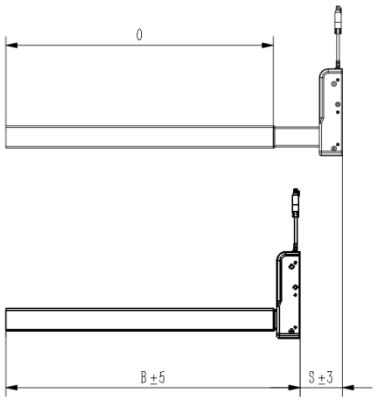

Version	Combination code	B (Installation Dimensions) [mm]	S (Itinerary) [mm]	O (outer tube length) [mm]
EU	HF2A xxxx 500 / 665	665	500	600

DL6H

F2A installation dimensions, stroke, and outer tube length (mm)

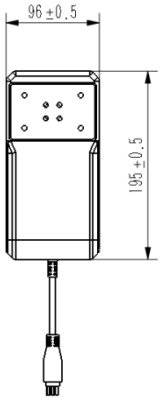

Motor housing
Outline dimensions

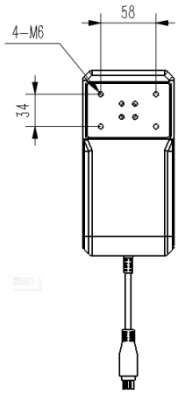

Lifting column base
mounting dimensions

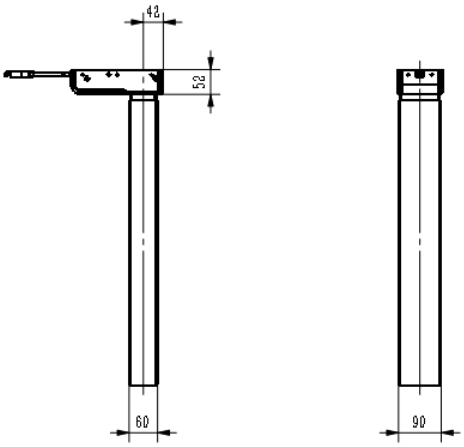

HF2A Dimensions(mm)

For installation instructions and usage guidelines, please refer to the relevant user manual.