NATE

LTE'S GET ACTIVE

E4(A)Pro-2SABF2(A)
Product Specification



www.natekj.com

NATE DRIVE

Product Specification

NT33-E4(A)Pro-2SA BF2(A)

Product Characteristics



- **Height Range ： 710-1150mm**
- **Length range ： 1200mm**
- **Tabletop size ： 1200mm *800mm**
- **Foot length ： 600mm**
- **No hole design ，**
- **Load Capacity ： 70kg**
- **Maximum speed ： 20mm/s**
- **Low Noise Level ：≤ 50dB**
- **Anti-collision**
- **Standby ： < 0.3W**
- **Color ： White （ RAL9016 ） Black （ RAL9005 ） Grey （ RAL7045 ）**
- **Package Size ： 890*270*200mm/1280*680*105mm**
- **Gross/ Net Weight ： 16.35/14.2kg 、 18.35/15.25kg**

Available options

- Support customize colors
- Match with any hand controller
- Available with many type of feet

Usage

- Work schedule: 10%, 2 minutes of work and 18 minutes of rest
- Usage environment: Indoor
- Storage and Transportation Temperature:-10℃ ~ 70℃

Dimension drawing

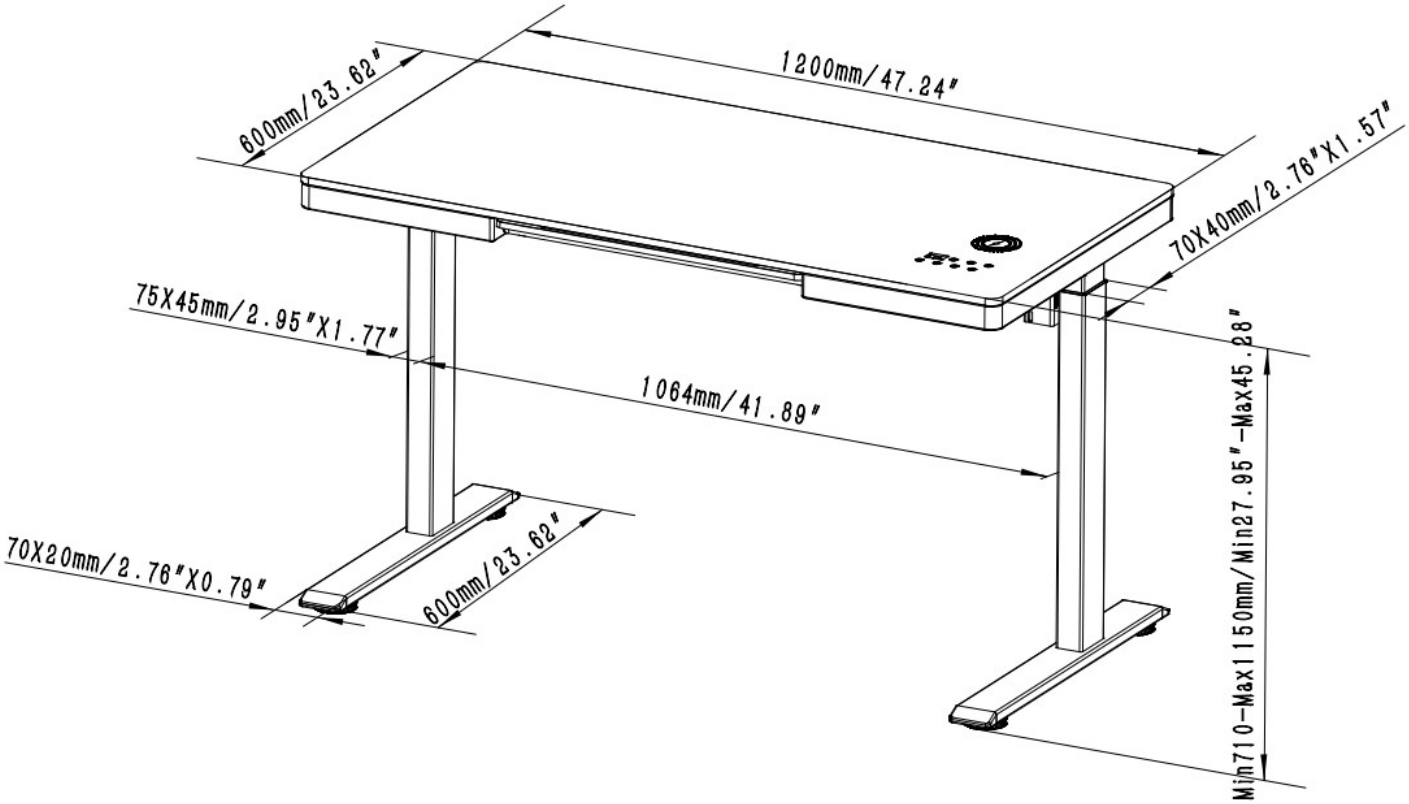

Example of naming convention

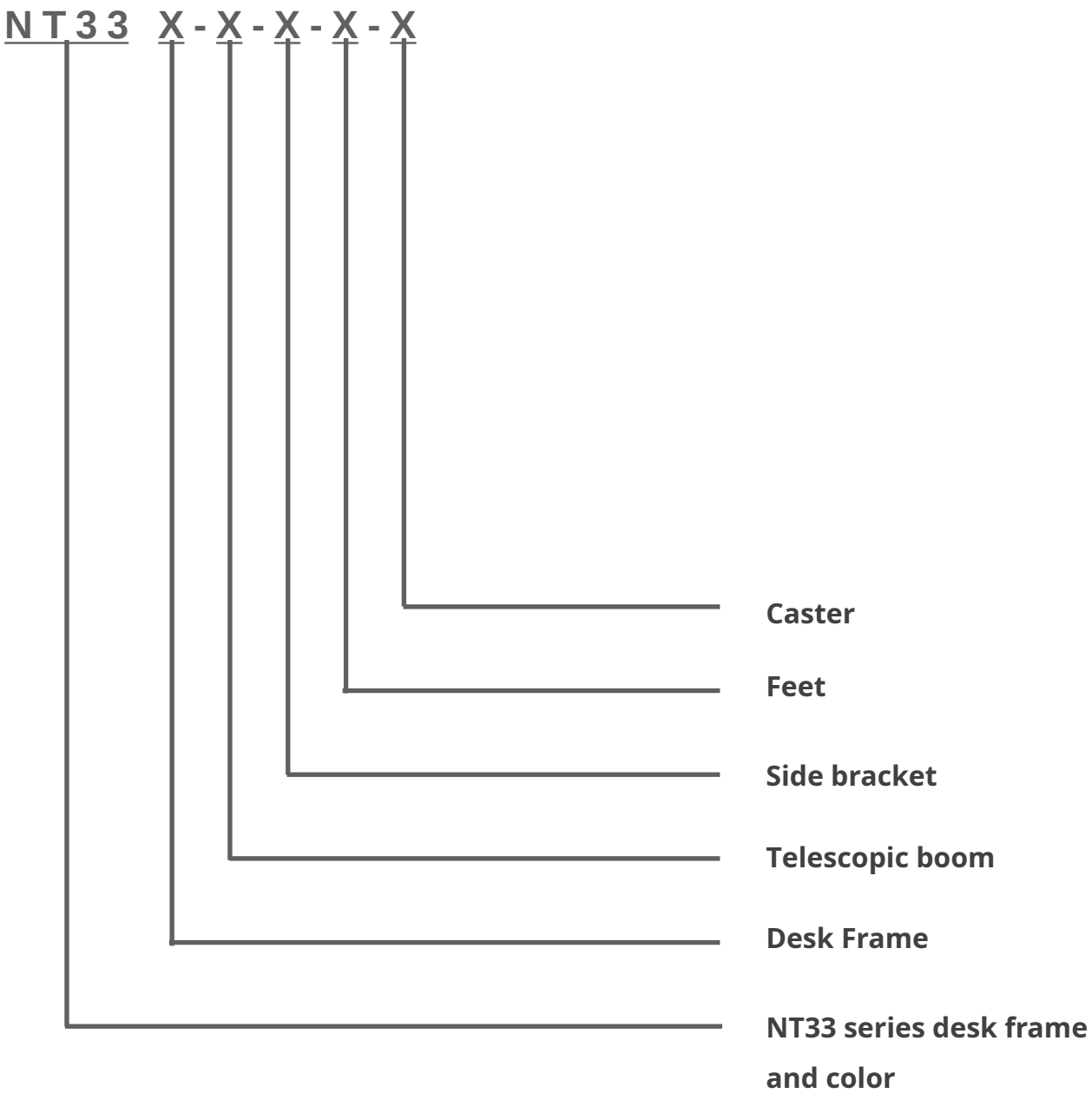

F represents no holes / A represents upwards / R represents reverse